MAGNAFLOW Performance EXHAUST
Mufflers, Converters, Systems and Tips

INSTALLATION INSTRUCTIONS FOR 16629/16635

2005– CHRYSLER 300 / DODGE MAGNUM – V6 2.7/3.5L

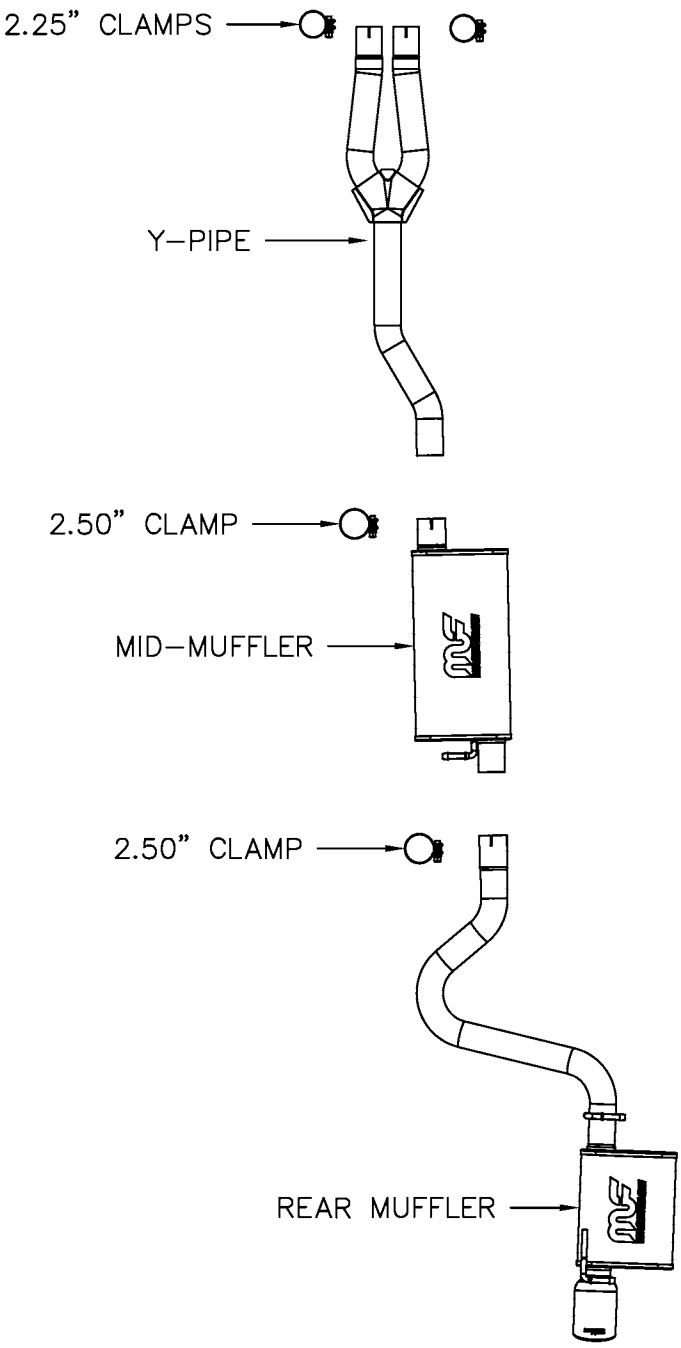

***Warning**: When working on, under, or around any vehicle exercise caution. Please allow the vehicle's exhaust system to cool before removal, as exhaust system temperatures may cause severe burns. If working without a lift, always consult vehicle manual for correct lifting specifications. Always wear safety glasses and ensure a safe work area. Serious injury or death could occur if safety measures are not followed.*

Step 1: (Carefully read all instructions before installation) Disconnect the vehicle's battery before removal of the OEM exhaust. This will allow the computer to reset itself with the new system, and prevent electrical accidents. Remove the OEM exhaust system by loosening the clamps, and disengaging the welded hangers from the rubber insulators, taking care not to damage the insulators. You can then remove the pipes and mufflers from the vehicle.

Step 2: Install the Y-pipe assembly using the supplied 2.25" clamps. Leave all clamps and fasteners loose for final adjustment of the complete system. Install the mid-muffler using a supplied 2.50" clamp and by fitting the welded hanger into the rubber insulator. Install the rear muffler in a similar fashion.

Step 3: With all components mounted loosely, adjust the system for overall aesthetics and clearance of frame & bodywork. (MAGNAFLOW recommends at least 1/2" of clearance between the exhaust system and any body panels to prevent heat-related body damage or fire.)

Step 4: Once a final position has been chosen for the new system, evenly tighten all fasteners from front to rear. The supplied band clamps must be VERY tight to properly align the pipes and prevent leaks (Approximately 40ft-lbs). U-bolt clamps should be tightened to approximately 30-35ft-lbs. Inspect all fasteners after 25-50 miles of operation and retighten if necessary.

MAGNAFLOW Performance Exhaust recommends professional installation on all their products

Technical support: 1-800-959-9226 ext. 4500

MAGNAFLOW Performance Exhaust – 22961 Arroyo Vista – Rancho Santa Margarita, CA 92688

16635 12/2/13 REV 002