INSTALLATION INSTRUCTIONS

'17-'18 DODGE CHARGER 5.7L/6.2L/6.4L | PART NO. 19371

BILL OF MATERIALS:

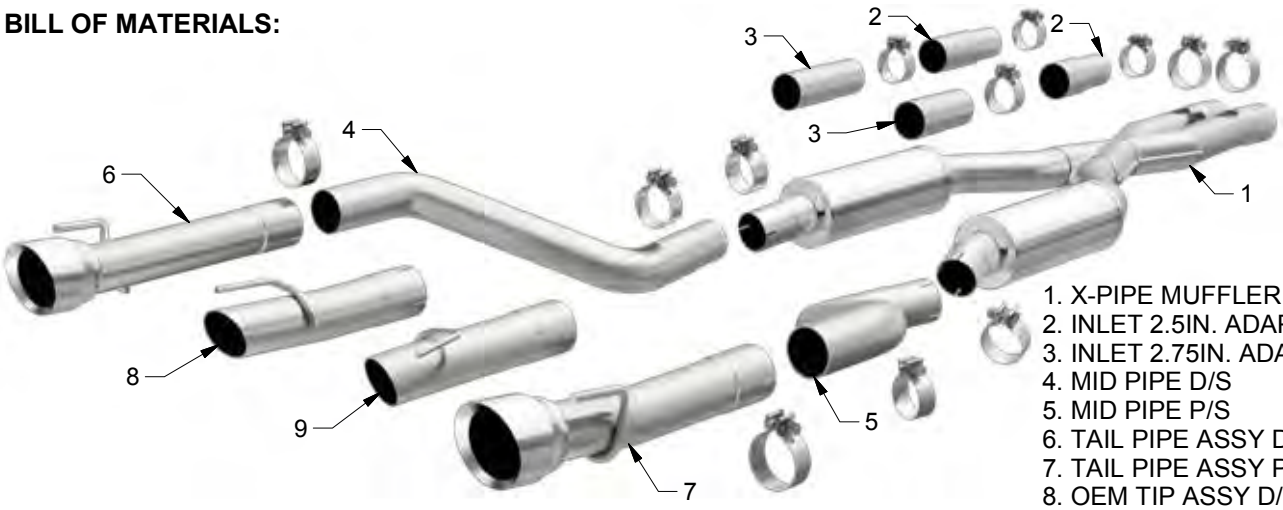

1. X-PIPE MUFFLER ASSY
2. INLET 2.5IN. ADAPT 5.7L
3. INLET 2.75IN. ADAPT 6.2/6.4L
4. MID PIPE D/S
5. MID PIPE P/S
6. TAIL PIPE ASSY D/S
7. TAIL PIPE ASSY P/S
8. OEM TIP ASSY D/S
9. OEM TIP ASSY P/S

WEAR SAFETY GLASSES

READ INSTRUCTIONS THOROUGHLY BEFORE INSTALLING PRODUCT

SHOP SUPPLIES:

SPRAY LUBRICANT

To ease removal of existing exhaust components (especially on older vehicles) spray penetrating lubricant on all fasteners and hangers/insulators that will be loosened or removed and let soak before disassembly.

HARDWARE KIT:

1. [2] 2.50" Torca Clamp
2. [6] 2.75" Torca Clamp
3. [4] 3.00" Torca Clamp

MINIMUM REQUIRED TOOLS:

Hanger Tool
(Or Pry Bar)

15mm
13mm

Sawzall or similar
cutting device

MAGNAFLOW RECOMMENDS PROFESSIONAL INSTALLATION ON ALL THEIR PRODUCTS

WARNING: When working on, under, or around any vehicle exercise caution. Please allow the vehicle's exhaust system to cool before removal, as exhaust system temperatures may cause severe burns. If working without a lift always consult vehicle manual for correct lifting specifications. Always wear safety glasses and ensure a safe work area. Serious injury or death could occur if safety measures are not followed.

ATTENTION: Always install any supplied band or U-bolt clamps to the proper torque specifications of 40-45 ft-lbs for band clamps and 30-35 ft-lbs for U-bolt clamps. Over tightening will result in the clamp breaking and will NOT be warranted by MagnaFlow.

MAGNAFLOW: 22961 Arroyo Vista - Rancho Santa Margarita, CA 92688 | 1(800) 990-0905
Technical Support: 1(800) 959-9226 | Email: moreinfo@magnaflow.com

Step 1. Begin removal of the OEM system by cutting both sides of the systems exhaust pipes. Four cuts will need to be made. For the drivers side cut 4" rearward of outlet weld on the exhaust control valve as shown in the attached picture.

Step 2. For the passengers side cut 4" rearward of the outlet weld on the exhaust control valve as shown in the attached picture.

Step 3. For the drivers side cut 4.75" in front of the welded hanger forward of exhaust control valve as shown in the attached picture.

Step 4. For the passengers side cut 4.50" in front of the welded hanger forward of exhaust control valve as shown in the attached picture. With both valve assemblies cut from the OEM system, loosen the band clamps attaching the mufflers to the OEM tips. Both tail pipe sections may now be removed.

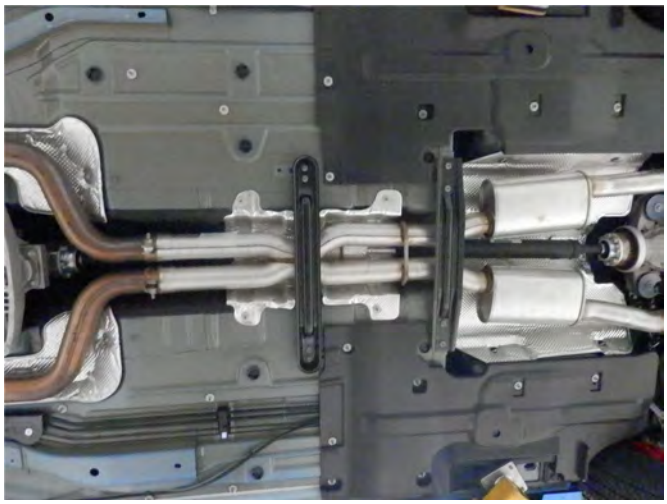

Step 5. Loosen the two OEM clamps at the outlet of the catalytic converters and remove the two OEM cross braces. Carefully remove the rest of the exhaust system. Disengage all welded hangers from the rubber insulators. Do not discard or damage the clamps or rubber insulators as they will be needed to install the new system.

Step 6. Begin installation of the new system by slipping the inlet tubes corresponding with your vehicle. Loosely securing associated clamps provided. Next slip on the X-Pipe Muffler Assembly over the inlet tube adaptors. Loosely secure using two of the suppled 3.00" clamps. Orientation of the Muffler Assembly can be confirmed by the MF logo being "upright" after installation.

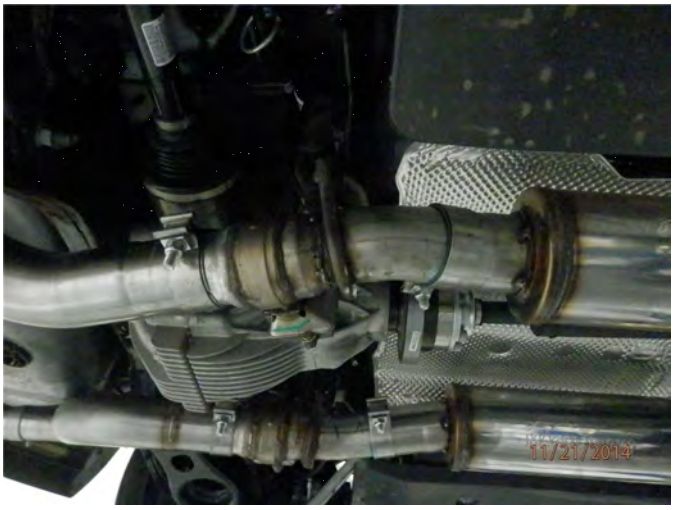

Step 7. Next, loosely fasten the X-Pipe Muffler Assembly outlet pipes to the OEM control valve outlet that you have just cut using the supplied 2.75" clamps. Attach the two Mid Pipes in a similar fashion to the outlet of the control valve.

Step 8. Loosely attach each Tail Pipe Assembly to the Mid Pipes using the supplied clamps. Engage the welded hangers for each to the rubber insulators.

Step 9. Once a final position has been chosen for the new exhaust system, evenly tighten all clamps from front to rear using the torque specifications on page one of the instructions. Inspect all fasteners after 25-50 miles of operation and re-tighten if necessary.